NVIDIA MMS4C1X FRO 1600Gbps, 2xDR4, Twin-port OSFP, 2xMPO (APC), 1310nm Single Mode Transceiver (up to 500m)

Table of Contents

1 Introduction 3
1.1 Key Features 3
1.2 Applications 4
2 Pin Description 5
2.1 OSFP Pin Description 5
2.1.1 OSFP Module Pad Layout 6
2.2 Control Signals (OSFP) 6
2.3 Diagnostics and Other Features 7
3 Specifications 8
3.1 Absolute Maximum Specifications 8
3.2 Recommended Operating Conditions and Power Supply Requirements 8
3.3 Electrical Specifications 9
3.3.1 Electrical Specification for Low Speed Signal 9
3.4 Optical Specifications 9
3.5 Mechanical Specifications 10
3.5.1 IHS Mechanical Dimensions 11
3.5.2 RHS Mechanical Dimensions 12
3.6 Labels 13
3.6.1 Transceiver Labeling and Fiber Polarity 13
3.6.2 Back shell Label 13
3.6.2.1 Transceiver Back-Shell Label Serial Number Legend 14
3.6.3 Regulatory Compliance 14
3.7 Connector and Cabling Details 14
3.7.1 MPO-12/APC Optical Connector 14
3.7.1.1 NVIDIA Supplied Crossover Type-B Fiber Cables 15
3.7.2 Handling and Cleaning 17
3.7.3 Cable Management Guidelines 20
4 Ordering Information 21
4.1 Part Numbers and Description 21
5 Recommended NVIDIA Supplied Crossover Fiber Cables Part Numbers 22
6 Document Revision History 24

1 Introduction

The MMS4C10 and MMS4C11 are an NVIDIA Gen2 FRO (Fully Retimed Optics) 1600Gb/s 2xDR4, single-mode optical transceivers, supporting both Ethernet and Infiniband XDR (MMS4C11) and XDR only (MMS4C10) InfiniBand protocols. The line rate is 200Gb/s using Pulse Amplitude Modulation at 4-channels (200G-PAM4), enabling two data bits to transfer per clock pulse.

The electrical configuration is 8-channels of 200G-PAM4. Optical configuration is based on two Datacenter Reach, 4-channel (2xDR4), 800Gb/s optical connectors.

Optical connectors are Multiple Push-On 12-fiber, Angled Polished Connector or MPO-12/APC. Two MPO-12/APC optical connectors are used per transceiver.

The 2x800G transceiver engine enables the InfiniBand Quantum-X800 QM3400, 72-cage switch to support 144-ports of 800Gb/s, and the Ethernet SP-6 SN6600 pluggable switches. In addition, it supports the Vera Rubin-NVL72 platforms.

Based on 9-um, single mode fibers, the main application is linking two switches together up to 500-meters, or two 800G links to two Switches or network adapters for storage and compute servers. The 500-meter length assumes two optical patch panels, or four optical connectors in the link.

NVIDIA's transceivers guarantee optimal operation in NVIDIA end-to-end InfiniBand systems, and rigorous production testing ensures the lowest bit error rates, low-latency, and best out-of-the-box installation experience, performance, and durability.

IHS Transceiver Illustration	RHS Transceiver Illustration
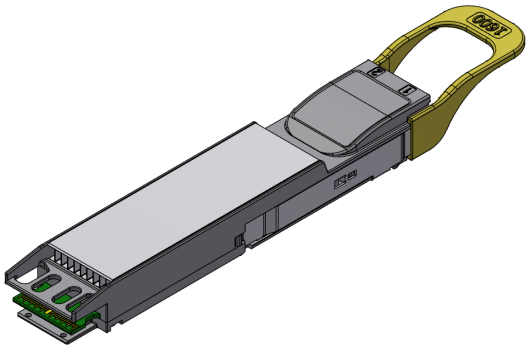	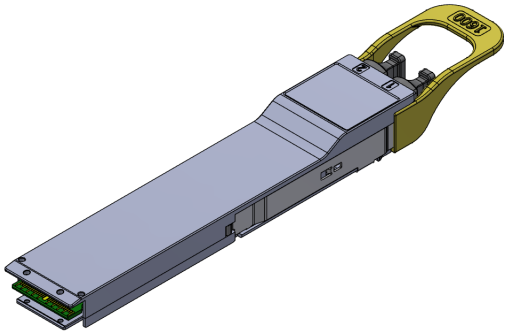

Images are for illustration purposes only. Product manufacturing sites, labels, colors, and dimensions may vary.

1.1 Key Features

- 1600Gb/s single mode transceiver
- 8-channels of 200G-PAM4 electrical modulation
- Two ports of 4-channel 200G-PAM4 optical modulation

- Two MPO-12/APC optical connectors
- 1310nm laser
- Maximum reach: 500-meters
- 28W max power
- Single 3V power supply
- Class 1 laser safety
- Hot pluggable, RoHS compliant
- Supports CMIS 5.0 and above
- Case temperature range of 20°C to +70°C
- Secure Firmware boot and update features
- Diffrent parts for XDR and for 800GbE

1.2 Applications

- IHS version used in Quantum-3, and air-cooled Spectrum-6 switches.
- RHS version is used in Quantum-3, liquid-cooled Spectrum-6 switches, and Vera Rubin NVL72 systems.

2 Pin Description

2.1 OSFP Pin Description

Pin	Symbol	Description	Pin	Symbol	Description
1	GND	Ground	31	GND	Ground
2	Tx2p	Transmitter Non-Inverted Data Input	32	Rx2p	Receiver Non-Inverted Data Output
3	Tx2n	Transmitter Inverted Data Input	33	Rx2n	Receiver Inverted Data Output
4	GND	Ground	34	GND	Grounds
5	Tx4p	Transmitter Non-Inverted Data Input	35	Rx4p	Receiver Non-Inverted Data Output
6	Tx4n	Transmitter Inverted Data Input	36	Rx4n	Receiver Inverted Data Output
7	GND	Ground	37	GND	Ground
8	Tx6p	Transmitter Non-Inverted Data Input	38	Rx6p	Receiver Non-Inverted Data Output
9	Tx6n	Transmitter Inverted Data Input	39	Rx6n	Receiver Inverted Data Output
10	GND	Ground	40	GND	Ground
11	Tx8p	Transmitter Non-Inverted Data input	41	Rx8p	Receiver Non-Inverted Data Output
12	Tx8n	Transmitter Inverted Data Input	42	Rx8n	Receiver Inverted Data Output
13	GND	Ground	43	GND	Ground
14	SCL	2-wire serial interface clock	44	INT / RSTn	Module Interrupt / Module Reset
15	VCC	+3.3V Power	45	VCC	+3.3V Power
16	VCC	+3.3V Power	46	VCC	+3.3V Power
17	LPWn / PRSn	Low-Power Mode / Module Present	47	SDA	2-wire Serial interface data
18	GND	Ground	48	GND	Ground
19	Rx7n	Receiver Inverted Data Output	49	Tx7n	Transmitter Inverted Data Input
20	Rx7p	Receiver Non-Inverted Data Output	50	Tx7p	Transmitter Non-Inverted Data Input
21	GND	Ground	51	GND	Ground
22	Rx5n	Receiver Inverted Data Output	52	Tx5n	Transmitter Inverted Data Input
23	Rx5p	Receiver Non-Inverted Data Output	53	Tx5p	Transmitter Non-Inverted Data Input
24	GND	Ground	54	GND	Ground
25	Rx3n	Receiver Inverted Data Output	55	Tx3n	Transmitter Inverted Data Input

Pin	Symbol	Description	Pin	Symbol	Description
26	Rx3p	Receiver Non-Inverted Data Output	56	Tx3p	Transmitter Non-Inverted Data Input
27	GND	Ground	57	GND	Ground
28	Rx1n	Receiver Inverted Data Output	58	Tx1n	Transmitter Inverted Data Input
29	Rx1p	Receiver Non-Inverted Data Output	59	Tx1p	Transmitter Non-Inverted Data Input
30	GND	Ground	60	GND	Ground

2.1.1 OSFP Module Pad Layout

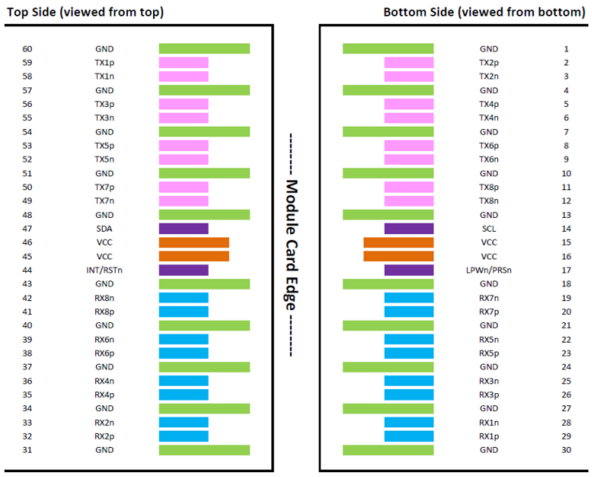

The Active Optical Cable (AOC) pin assignment is SFF-8679 compliant.

2.2 Control Signals (OSFP)

This device supports CMIS 4.0 management interface, with an OSFP form factor and interfaces. This implies that the control signals shown in the pad layout are implemented with the following functions:

Name	Function	Description
LPWn/ PRSn	Input/output	Multi-level signal for low power control from host to module and module presence indication from module to host. This signal requires the circuit as described in the OSFP Specification.
INT/RSTn	Input,/ output	Multi-level signal for interrupt request from module to host and reset control from host to module. This signal requires the circuit as described in the OSFP Specification.
SCL	BiDir	2-wire serial clock signal. Requires pull-up resistor to 3.3V on host.
SDA	Bidir	2-wire serial data signal. Requires pull-up resistor to 3.3V on host.

2.3 Diagnostics and Other Features

> ⚠ This document describes hardware features and capabilities. For detailed features availability, contact your NVIDIA representative for NVIDIA Support for the firmware release notes.

The transceiver has a microcontroller with functions for monitoring supply voltage, temperature, laser bias current, optical transmit and receive levels with associated warning and alarm thresholds that can be read by the switch software and viewed remotely.
The transceiver supports the following key features from the OSFP MSA specification:

1. Physical layer link optimization.
2. Digital Diagnostic Monitoring (DDM).
3. Page 13h and 14h Module Diagnostics
4. Interrupt indications.

Other CMIS functions, such as FW upgrade, are supported via CDB commands.

3 Specifications

3.1 Absolute Maximum Specifications

Absolute maximum ratings are those beyond which damage to the device may occur.

Prolonged operation between the operational specifications and absolute maximum ratings is not intended and may cause permanent device degradation.

Parameter	Symbol	Min	Max	Units
Storage Temperature	T_S	-40	85	°C
Operating Case Temperature	T_{OP}	20	70	°C
Supply Voltage	Vcc	-0.5	3.6	V
Relative Humidity (non-condensing)	RH – Option 1	5	85	%
Control Input Voltage	V_I	-0.3	Vcc+0.5	V

- Pluggable power down is allowed only 500u/sec after reset assert.
- Module temperature per DDMI readout of up to 75°C is allowed.

3.2 Recommended Operating Conditions and Power Supply Requirements

Parameter	Symbol	Min	Typ	Max	Units
Power Supply Voltage	VCC	3.135	3.3	3.465	V
Instantaneous peak current - High-Power Mode transmitters on	ICC_IP_HP	-	-	13400	mA
Sustained peak current a High-Power Mode transmitters on	ICC_SP_HP	-	-	11165	mA
Sustained peak duration – Low-Power mode	T_init_LP	-	-	650	ms
Instantaneous peak current – Low Power Mode	ICC_IP_LP			3200	mA
Maximum Power Dissipation	PD	-	24	28	W
Maximum Power Dissipation, Low Power Mode	PDLP	-	-	2	W
Discharge skew rate		-	TBD*	TBD**	mA/us
Signaling Rate per Lane	SRL	-	106.25	-	GBd
Two Wire Serial Interface Clock Rate	-	TBD	-	TBD	kHz
Power Supply Noise Tolerance (10Hz - 10MHz)	-	-	-	TBD	mV
Rx Differential Data Output Load	-	-	TBD	-	Ohm
Operating Distance	-	-	-	500	m

- From High-Power Mode Transmitters ON due to Host Power Down

** From High-Power Mode Transmitters ON due to Hot Unplug

3.3 Electrical Specifications

Parameter	Symbol	Min	Typ	Max	Units
Receiver (Module Output)					
Peak-peak AC common-mode voltage	VCMLF VCMFB	-	-	32 80	mV
Differential output Voltage (Long mode)		-	-	845	mV
Differential output Voltage (Short mode)		-	-	600	mV
Eye height, differential		15	-	-	mV
Differential Termination Mismatch		-	-	10	%
Transition Time (min, 20% to 80%)		8.5	-	-	ps
DC common mode Voltage		-350	-	2850	mV
Transmitter (Module Input)					
Differential pk-pk input Voltage tolerance		750	-	-	mV
Differential termination mismatch		-	-	10	%
Single-ended voltage tolerance range		-0.4	-	3.3	V
DC common mode Voltage		-350	-	2850	mV

Notes:

Amplitude customization beyond these specs is dependent on validation in customer system.

3.3.1 Electrical Specification for Low Speed Signal

Parameter	Symbol	Min	Max	Units
Module output SCL and SDA	VOL	0	0.4	V
	VOH	VCC-0.5	VCC+0.3	V
Module Input SCL and SDA	VIL	-0.3	VCC*0.3	V
	VIH	VCC*0.7	VCC+0.5	V

3.4 Optical Specifications

Parameter	Symbol	Min	Typ	Max	Unit	Notes
Transmitter						
Wavelength	λC	1304.5	1311	1317.5	nm	

Side Mode Suppression Ratio	SMSR	30	-	-	dB	
Average Launch Power, each lane	AOPL	2.5	3.5	4.0	dBm	1, 6
Outer Optical Modulation Amplitude (OMAouter), each lane	TOMA	1.0	3.0	5.0	dBm	2, 6
Launch Power in terms of OMAouter minus TDECQ, each lane	TOMA-TDECQ	-	-	-	dBm	
Transmitter and Dispersion Eye Closure for PAM4 (TDECQ), each lane	TDECQ	-	-	-	dB	
Average Launch Power of OFF Transmitter, each lane	TOFF	-	-	-15	dBm	
Extinction Ratio, each lane	ER	3.5	-	-	dB	6
RIN21.4OMA	RIN	-	-	-139	dB/Hz	
Optical Return Loss Tolerance	ORL	-	-	21.4	dB	
Transmitter Reflectance	TR	-	-	-26	dB	3
Receiver						
Wavelength	λC	1304.5	1311	1317.5	nm	
Damage Threshold, average optical power, each lane	AOPD	5	-	-	dBm	
Average Receive Power, each lane	AOPR	-1.0	-	4.0	dBm	6
Receive Power (OMAouter), each lane	OMA-R	-	-	5.0	dBm	
Receiver Reflectance	RR	-	-	-26	dB	
Receiver Sensitivity (OMAouter), each lane	SOMA	-	-	-	dBm	4
Stressed Receiver Sensitivity (OMAouter), each lane	SRS	-	-	-	dBm	5
Conditions of stressed receiver sensitivity test						
Stressed eye closure for PAM4 (SECQ)			3.4		dB	
OMAouter of each aggressor lane			4.2		dBm	

Notes:

1. Average launch power, each lane (min) is informative and not the principal indicator of signal strength.
2. Even if TDECQ < 1.4dB, OMAouter (min) must exceed this value.
3. Transmitter reflectance is defined looking into the transmitter.
4. Receiver sensitivity (OMAouter), each lane (max) is informative and is defined for a transmitter with SECQ of 0.9 dB.
5. Measured with conformance test signal at TP3 for the BER = $1x10^{-6}$
6. Measured at BER $1x10^{-6}$ and Error free post FEC

3.5 Mechanical Specifications

⚠ Shipped packages may vary in size, artwork, raw materials and other packaging elements.

Images are for illustration purposes only. Product labels, colors, and form may vary. Additional alernate mechanical designs may be introduced in future updates.

3.5.1 IHS Mechanical Dimensions

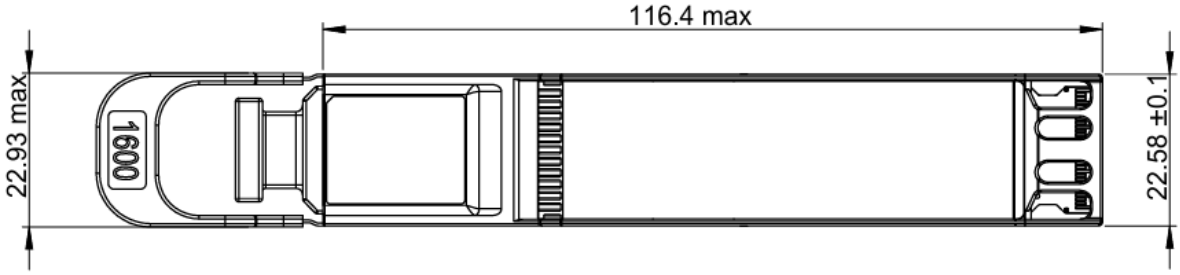

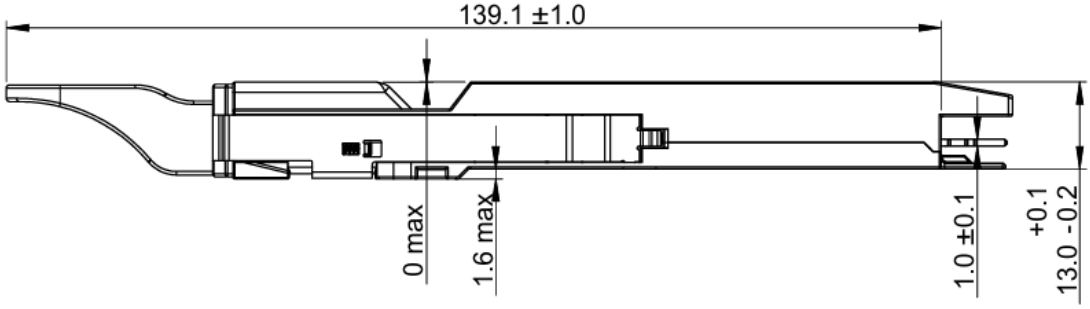

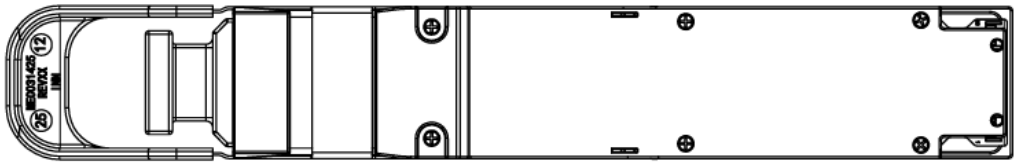

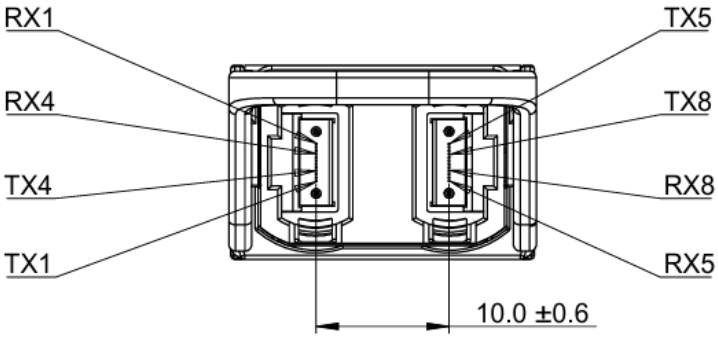

3.5.2 RHS Mechanical Dimensions

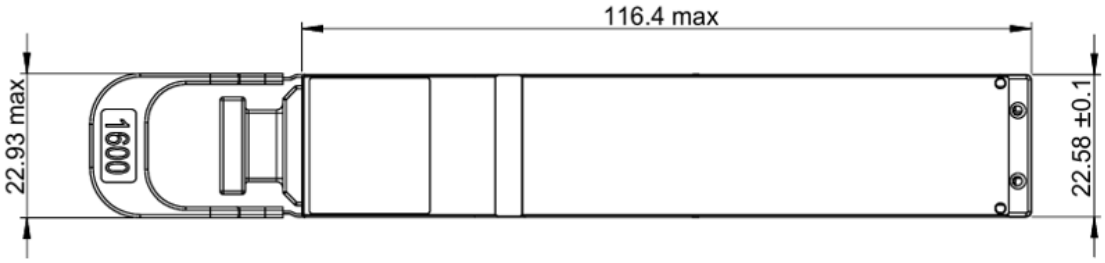

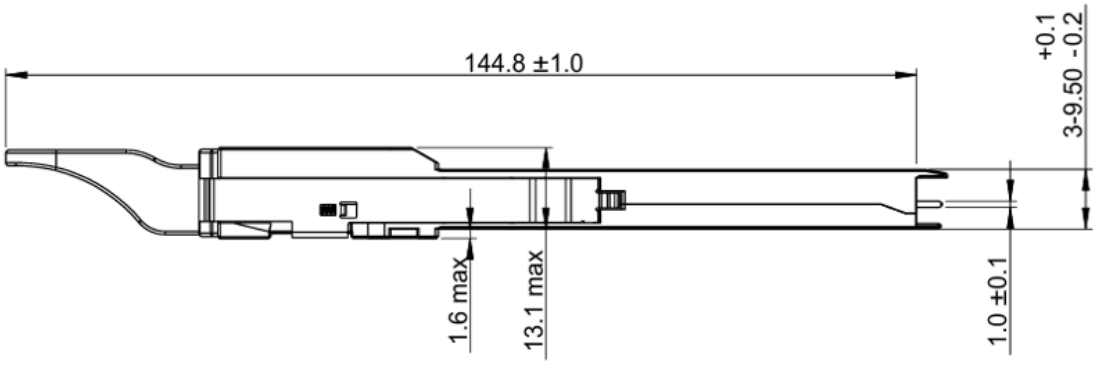

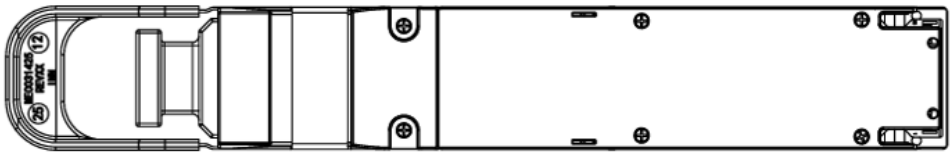

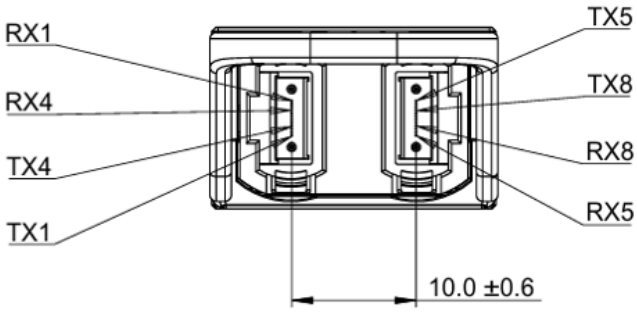

Some modules have the speed indicated on the pull-tab.

3.6 Labels

3.6.1 Transceiver Labeling and Fiber Polarity

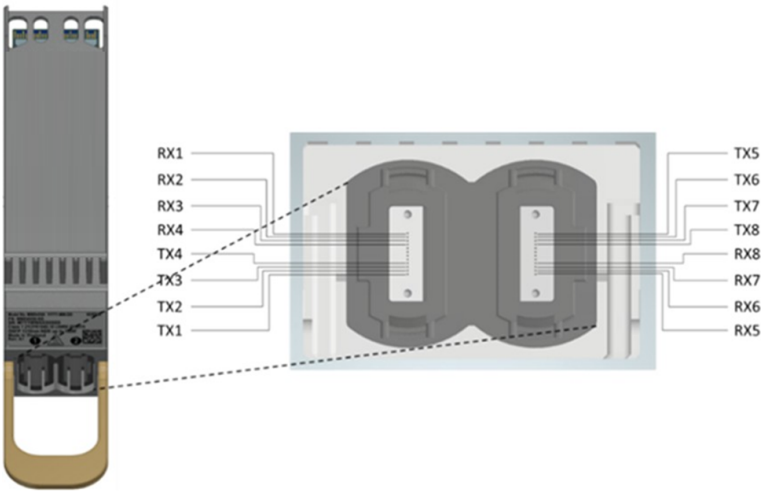

Transceiver port labeling and lane routing. Txn/Rxn refers to the OSFP pin description.

3.6.2 Back shell Label

The label applied on the transceiver's back-shell is illustrated below. Note that the Images are for illustration purposes only. Labels look and placement may vary.

Transceiver Label (Illustration)

Images are for illustration purposes only. Product labels, colors, and form may vary.

3.6.2.1 Transceiver Back-Shell Label Serial Number Legend

Symbol	Meaning	Notes
MT	Manufacturer name	2 digits (alphanumeric)
YY	Year of manufacturing	2 last digits of the year (numeric)
WW	Week of manufacturing	2 digits (numeric)
XX	Manufacturer Site (FT)	Two characters
SSSSS	Serial number	5 digits (decimal numeric) for serial number, starting from 00001.

3.6.3 Regulatory Compliance

The transceiver is a Class 1 laser product. It is certified per the following standards:

Feature	Agency	Standard
Laser Eye Safety	FDA/CDRH	CDRH 21 CFR 1040 and Laser Notice 50
Electrical Safety	CB	IEC 62368
Electrical Safety	UL/CSA	UL 62368 and CAN/CSAN 62368

3.7 Connector and Cabling Details

3.7.1 MPO-12/APC Optical Connector

The Twin-port transceiver has a unique NVIDIA patented design enabling two, multiple-push-on/angled-polished-connector 12-fiber (MPO-12/APC) optical connectors per single OSFP form-factor by turning the optical connectors vertically in the twin-port transceiver end. This enables it to host two transceivers inside, each with its own MPO-12/APC optical connector operating independently that can link to another Twin-port transceiver or to a single-port transceiver.

The MPO-12 has a 12-fiber ribbon but only 8-fibers are used – four transmit and four receive fibers for the 8-channels 200G-PAM4.

- The APC design minimizes back reflections and signal interference by diverting back reflected light from the fiber face to be absorbed into the fiber cladding.
- A positioning key on top of the connector together with the alignment pins define the fiber position numbering scheme to align pin 1 in the optical connector to pin 1 in the transceiver also called “polarity”
- Transceivers have alignment pins for precise positioning of the cable connector against the optical beams. The fiber cable has alignment holes matching the transceiver’s pins.

- Important to note that transceivers have pins. Optical connectors have holes used with transceivers have holes. Optical connectors with pins are not compatible with transceivers and used in trunk cabling to connect two fiber cables together.

The MPO-12/APC optical connector is used in both the 200G-PAM4 based single mode and multimode fiber cables.

Single mode optics is denoted by a yellow-colored pull tab and yellow-colored optical fiber. Green plastic shell on the MPO-12/APC connector denotes Angled Polish Connector and is not compatible with Ultra-flat Polished Connectors (UPC) used with slower line rate transceivers.

MPO-12/APC Showing 4-Transmit and 4-Receive Fibers and Angled Polish Connector End face

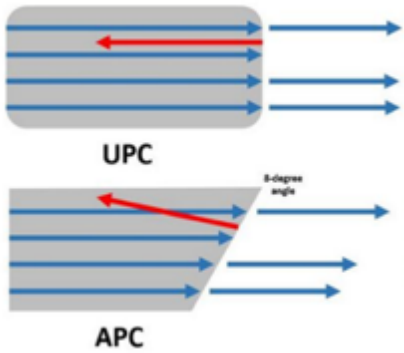

3.7.1.1 NVIDIA Supplied Crossover Type-B Fiber Cables

Linking two transceivers directly together requires aligning the transceiver laser sources with the correct photo detectors in the receive transceiver. Transmit and receive fibers are switched inside the cable enabling two transceivers to be directly connected to each other. This is called a Type-B crossover fiber.

Each of the two 4-channel XDR ports in the Twin-port transceiver has its own 4-channel optical cable that can link to two single-port 800Gb/s transceiver. Two fiber cables are needed for each Twin-port transceiver. Fiber cables are crossover cable Type-B that aligns the transmit laser with the opposite transceiver's receiver photodetector allowing to directly connect two transceivers together to maintain minimum optical losses, lowest back reflections, longest reach and increased reliability without the use of optical patch panels.

NVIDIA supplies crossover, single mode fiber cables up to 100-meters. For length from 100-to-500-meters, a crossover fiber segment must be implemented in the link to align transmit lasers with receiver photodetectors. This can be implemented by building the fiber cable as a crossover cable, or adding a NVIDIA crossover cable in the link, or via an optical patch panel with a crossover segment.

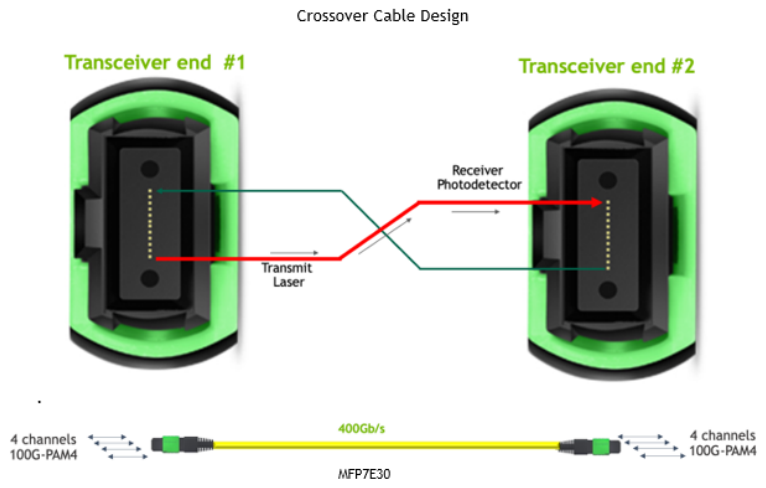

Note: Refer to the Recommended Fiber Cables table for more information.

Transceivers have alignment pins for precise positioning of the cable connector against the optical beams. The fiber cable has alignment holes matching the transceiver's pins.

MPO Connector with Alignment Holes and Positioning Key

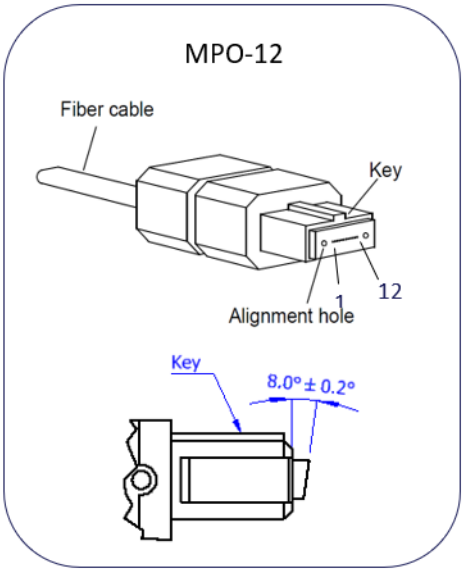

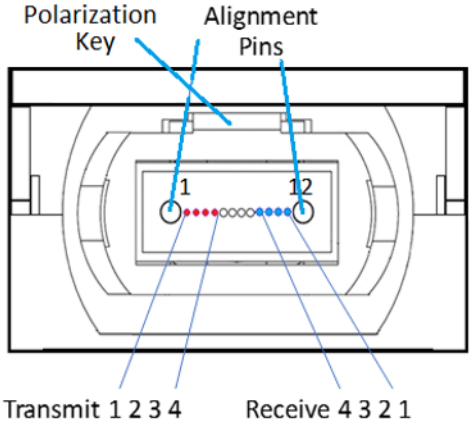

NDR transceiver: MPO Receptacle, Lane Assignment, and Positioning Key (front view)

Reference: IEC specification IEC 61754-7

3.7.2 Handling and Cleaning

The transceiver can be damaged by exposure to current surges and over voltage events. Take care to restrict exposure to the conditions defined in Absolute Maximum Ratings. Observe normal handling precautions for electrostatic discharge-sensitive devices.

The transceiver is shipped with dust caps on both the electrical and the optical port. The cap on the optical port should always be in place when there is no fiber cable connected. The optical connector has a recessed connector surface which is exposed whenever it has no cable nor cap.

Important Notes:

- Keep both the fiber and transceiver dust caps.

- Clean both transceiver receptacle and cable connector prior to insertion of the fiber cable, to prevent contamination from it.
  The dust cap ensures that the optics remain clean during transportation. Standard cleaning tools and methods should be used during installation and service. Liquids must not be applied.
- 80% of transceiver link problems are related to dirty optical connectors.

FLUKE
NETWORKS

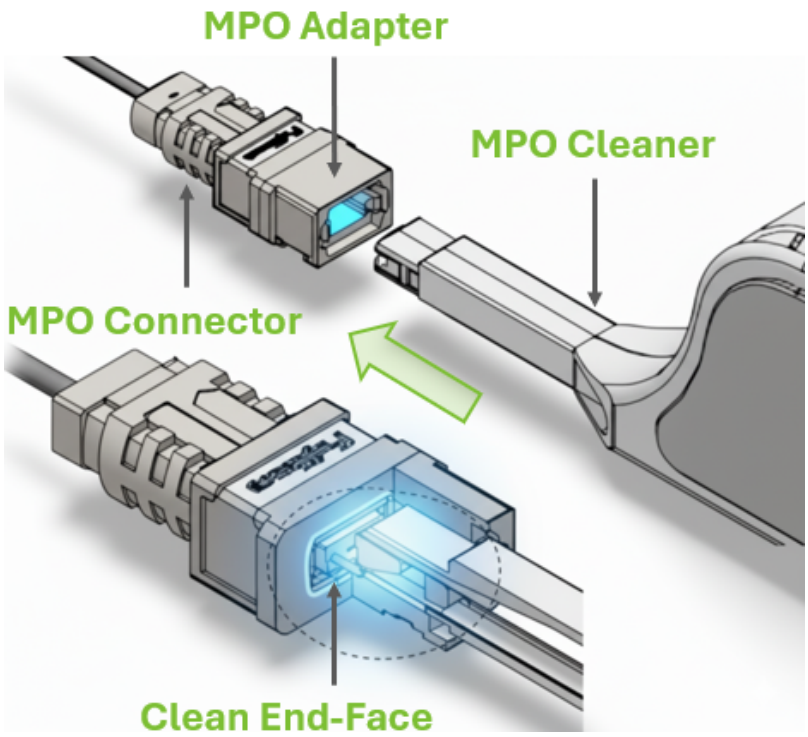
MPO Adapter
MPO Cleaner
MPO Connector
Clean End-Face

3.7.3 Cable Management Guidelines

For more information and general interconnect management and installation, see NVIDIA Cable Management Guidelines and FAQ Application Note.

4 Ordering Information

4.1 Part Numbers and Description

Model Number	NVIDIA OPN	Description
MMS4C10	980-9IAU0-00XM00	NVIDIA twin port transceiver, 2xDR4, 1600Gbps, OSFP, 2xMPO(APC), 1310nm SMF, up to 500m, RHS, FRO, Gen2, XDR Only
	980-9IAU0-00XM01	NVIDIA twin port transceiver, 2xDR4, 1600Gbps, OSFP, 2xMPO(APC), 1310nm SMF, up to 500m, IHS, FRO, Gen2, XDR Only
MMS4C11	980-9IAU1-00XM00	NVIDIA twin port transceiver, 2xDR4, 1600Gbps, OSFP, 2xMPO(APC), 1310nm SMF, up to 500m, RHS, FRO, Gen2, XDR + Ethernet
	980-9IAU1-00XM01	NVIDIA twin port transceiver, 2xDR4, 1600Gbps, OSFP, 2xMPO(APC), 1310nm SMF, up to 500m, IHS, FRO, Gen2, XDR + Ethernet

5 Recommended NVIDIA Supplied Crossover Fiber Cables Part Numbers

Single-mode, Straight Crossover Fibers

OPN	4-channel MPO/APC to 4-channel MPO/APC
MFP7E30-N001	1m
MFP7E30-N002	2m
MFP7E30-N003	3m
MFP7E30-N005	5m
MFP7E30-N007	7m
MFP7E30-N010	10m
MFP7E30-N015	15m
MFP7E30-N020	20m
MFP7E30-N030	30m
MFP7E30-N050	50m
MFP7E30-N060	60m
MFP7E30-N070	70m
MFP7E30-N100	100m

Lengths beyond 100-meters is not offered but available from third-party suppliers

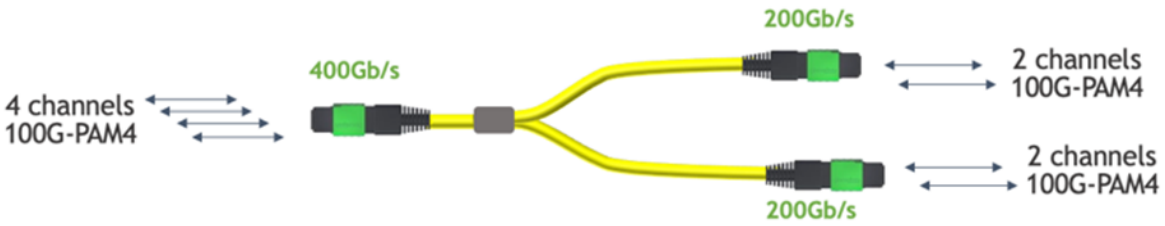

Single-mode, 1:2 Splitter Crossover Fibers

OPN	4-channel MPO/APC to Two 2-channel MPO/APC
MFP7E40-N003	3m
MFP7E40-N005	5m
MFP7E40-N007	7m

OPN	4-channel MPO/APC to Two 2-channel MPO/APC
MFP7E40-N010	10m
MFP7E40-N015	15m
MFP7E40-N020	20m
MFP7E40-N030	30m
MFP7E40-N050	50m

6 Document Revision History

Rev	Date	Description
1.1	Oct. 2026	Updated Max Power to 28W.
1.0	Mar. 2026	First Draft. Preliminary and subject to change.

Notice

This document is provided for information purposes only and shall not be regarded as a warranty of a certain functionality, condition, or quality of a product. Neither NVIDIA Corporation nor any of its direct or indirect subsidiaries and affiliates (collectively: "NVIDIA") make any representations or warranties, expressed or implied, as to the accuracy or completeness of the information contained in this document and assumes no responsibility for any errors contained herein. NVIDIA shall have no liability for the consequences or use of such information or for any infringement of patents or other rights of third parties that may result from its use. This document is not a commitment to develop, release, or deliver any Material (defined below), code, or functionality.

NVIDIA reserves the right to make corrections, modifications, enhancements, improvements, and any other changes to this document, at any time without notice. Customer should obtain the latest relevant information before placing orders and should verify that such information is current and complete.

NVIDIA products are sold subject to the NVIDIA standard terms and conditions of sale supplied at the time of order acknowledgement, unless otherwise agreed in an individual sales agreement signed by authorized representatives of NVIDIA and customer ("Terms of Sale"). NVIDIA hereby expressly objects to applying any customer general terms and conditions with regards to the purchase of the NVIDIA product referenced in this document. No contractual obligations are formed either directly or indirectly by this document.

NVIDIA products are not designed, authorized, or warranted to be suitable for use in medical, military, aircraft, space, or life support equipment, nor in applications where failure or malfunction of the NVIDIA product can reasonably be expected to result in personal injury, death, or property or environmental damage. NVIDIA accepts no liability for inclusion and/or use of NVIDIA products in such equipment or applications and therefore such inclusion and/or use is at customer's own risk.

NVIDIA makes no representation or warranty that products based on this document will be suitable for any specified use. Testing of all parameters of each product is not necessarily performed by NVIDIA. It is customer's sole responsibility to evaluate and determine the applicability of any information contained in this document, ensure the product is suitable and fit for the application planned by customer, and perform the necessary testing for the application in order to avoid a default of the application or the product. Weaknesses in customer's product designs may affect the quality and reliability of the NVIDIA product and may result in additional or different conditions and/or requirements beyond those contained in this document. NVIDIA accepts no liability related to any default, damage, costs, or problem which may be based on or attributable to: (i) the use of the NVIDIA product in any manner that is contrary to this document or (ii) customer product designs.

No license, either expressed or implied, is granted under any NVIDIA patent right, copyright, or other NVIDIA intellectual property right under this document. Information published by NVIDIA regarding third-party products or services does not constitute a license from NVIDIA to use such products or services or a warranty or endorsement thereof. Use of such information may require a license from a third party under the patents or other intellectual property rights of the third party, or a license from NVIDIA under the patents or other intellectual property rights of NVIDIA.

Reproduction of information in this document is permissible only if approved in advance by NVIDIA in writing, reproduced without alteration and in full compliance with all applicable export laws and regulations, and accompanied by all associated conditions, limitations, and notices.

THIS DOCUMENT AND ALL NVIDIA DESIGN SPECIFICATIONS, REFERENCE BOARDS, FILES, DRAWINGS, DIAGNOSTICS, LISTS, AND OTHER DOCUMENTS (TOGETHER AND SEPARATELY, "MATERIALS") ARE BEING PROVIDED "AS IS." NVIDIA MAKES NO WARRANTIES, EXPRESSED, IMPLIED, STATUTORY, OR OTHERWISE WITH RESPECT TO THE MATERIALS, AND EXPRESSLY DISCLAIMS ALL IMPLIED WARRANTIES OF NONINFRINGEMENT, MERCHANTABILITY, AND FITNESS FOR A PARTICULAR PURPOSE. TO THE EXTENT NOT PROHIBITED BY LAW, IN NO EVENT WILL NVIDIA BE LIABLE FOR ANY DAMAGES, INCLUDING WITHOUT LIMITATION ANY DIRECT, INDIRECT, SPECIAL, INCIDENTAL, PUNITIVE, OR CONSEQUENTIAL DAMAGES, HOWEVER CAUSED AND REGARDLESS OF THE THEORY OF LIABILITY, ARISING OUT OF ANY USE OF THIS DOCUMENT, EVEN IF NVIDIA HAS BEEN ADVISED OF THE POSSIBILITY OF SUCH DAMAGES. Notwithstanding any damages that customer might incur for any reason whatsoever, NVIDIA's aggregate and cumulative liability towards customer for the products described herein shall be limited in accordance with the Terms of Sale for the product.

Trademarks
NVIDIA, the NVIDIA logo, and Mellanox are trademarks and/or registered trademarks of NVIDIA Corporation and/or its affiliates in the U.S. and in other countries. Other company and product names may be trademarks of the respective companies with which they are associated.

Copyright
© 2026 NVIDIA Corporation & affiliates. All Rights Reserved.